CONTENTS

Back to contents

TVEL Turns 25

This September, Rosatom's nuclear fuel division TVEL celebrates its 25th anniversary. Rosatom leads the global nuclear fuel market, but fuel production and sales are not the only business of its nuclear fuel division. Rosatom is expanding its presence in energy storage, new materials, superconductors, decommissioning services, and other segments. Below you will find more on TVEL's activities.

The history of TVEL Fuel Company dates back to 12 September 1996. It does not mean, however, that uranium had not been enriched or fuel produced before — this began as early as the Soviet nuclear industry was making its first steps. The first centrifuge was put into operation in 1953. Four years later, the Ural Electrochemical Plant commissioned its first centrifuge-based uranium separation facility.

Fuel

Uranium enrichment is at the core of TVEL's business. The nuclear fuel division operates four enrichment facilities making around 40% of the global enrichment capacity. Design of the centrifuges is continuously upgraded.

Interesting fact

One uranium fuel pellet produces as much energy as a ton of oil.

Enriched uranium hexafluoride is used to fabricate fuel pellets, which are then placed into claddings and joined into assemblies. TVEL supplies fuel to all the nuclear power plants in Russia, power reactors in 15 countries, and research reactors in nine countries.

The division develops new fuels for nuclear reactors, such as, for example, accident tolerant fuel that is more resistant to loss-of-coolant accidents. MOX fuel for sodium-cooled fast reactors will contain plutonium extracted from spent nuclear fuel. This is another step towards 'closing' the nuclear fuel cycle, fuller utilization of natural uranium and minimization of nuclear waste. REMIX fuel is also a mixture of reprocessed uranium and plutonium, but designed for VVER reactors. Mixed uranium plutonium nitride (MUPN) fuel will be used in Generation IV BREST-OD-300 lead-cooled fast reactor.

TVEL global highlights

75 power reactors in **15** countries (every sixth reactor) run on Rosatom's fuel

17% of nuclear fuel fabricated in the world

Over a third of the uranium enrichment market

40% of the stable isotope market

107 isotopes of **21** chemical elements in production

47 subsidiaries

22,000 highly-qualified employees

USD662 m profit in 2020

USD15.7 bn in export contracts for nuclear front-end products and services for the next 10 years

USD30 m spent annually on environment protection

Superconductors

Technical superconductors are multi-core composite wires ranging from 0.1 to 6 mm in diameter and from hundreds of meters to several tens of kilometers in length and containing a precise share of superconducting materials.

In 2009, TVEL produced its first niobium-tin superconductors. Rosatom has already supplied over 220 tons of Nb3S superconductors for the world's largest International Thermonuclear Experimental Reactor (ITER) project.

In addition, Rosatom manufactured a 5 km niobium-titanium superconducting strand for the magnet used in the Compressed Baryonic Matter (CBM) experiment carried out by the Facility for Antiproton and Ion Research (FAIR). For CERN (European Organization for Nuclear Research), the division produced a pilot batch of superconducting niobium-tin strands with the total length of 50 km. All the strands passed qualification tests. Insulated rectangular wires will soon be tested by a foreign CT scanner producer.

Decommissioning

Since 2008, TVEL has been providing nuclear decommissioning services and gained a solid administrative and technological expertise in this segment. In 2019, the company became an integrator for decommissioning services in Rosatom. This July, the division approved

a hazardous site decommissioning program for the period until 2041. About RUB15 billion (USD 202.7 million) will be invested in robot-assisted automation of hazardous operations and digitalization of pre-project operations, design and data storage.

The decommissioning market is growing. Rosatom expects that decommissioning services will be required at about 1,200 nuclear facilities worldwide by 2050. Nukem Technologies will represent TVEL on the international market. This is a German engineering company and TVEL's subsidiary with extensive competencies in nuclear decommissioning.

Energy storage

This is a new and essential business for the division. TVEL's subsidiaries have gained much expertise in creating storage systems for the transport and energy industries: they re-equip loaders and other transport machinery at the division's production facilities and customer sites beyond the nuclear power sector. Early this year, TVEL's subsidiary RENERA, which develops energy storage systems, acquired a 49% stake in Enertech International, a South Korean manufacturer of electrodes, Li-ion cells and energy storage systems. The deal aims to expand Rosatom's presence on the international market, secure supplies of battery components, and obtain necessary competencies. In 2024, the division plans to set up production of world-class energy storage systems in Russia and enter foreign markets with its new products.

Rosatom's new product range includes fast-charging traction batteries for heavy duty trucks and energy storage systems for an electric vehicle platform.

Isotopes

Subsidiaries of Rosatom's nuclear fuel division also produce isotopes for industry, science and medicine. For example, TVEL supplied germanium-76 and molybdenum-100 for GERDA (GERmanium Detector Array project searching for the neutrinoless double beta decay of Ge-76) and AMoRE (a similar international project that uses Mo-100) experiments focused on the study of neutrino properties. Silicon-28 was supplied for the Kilogram-3 project aimed at developing a new standard of mass. In 2018, TVEL fabricated chromium-50 in the form of chromic anhydride for the Russian Academy of Sciences Institute for Nuclear Research that coordinates the BEST project focused on searching for sterile neutrinos. TVEL is also working to set up production of zirconium-96, another isotope used to explore the neutrinoless double beta decay. In addition, the company plans to manufacture a nuclear battery based on nickel-63. Another new product to be launched soon is carbon-13 labeled urea. This substance is used in breath tests to detect Helicobacter pylori, which causes gastritis, stomach and peptic ulcers.

3D printers and laser prototypes

TVEL has long been producing 3D printing powders. The most in-demand powders are made of stainless steel and titanium. The company is deploying a gas atomization technique and prepares to employ a plasma atomization method.

The division also manufactures 3D printers for the production of complex-shaped items. This is where additive technology proves faster and reduces material losses compared to lathe turning. Rosatom has developed two printer models, RusMelt 300M and RusMelt 600M, based on the selective laser melting technology. The next step is to design a direct metal deposition (DMD) printer that uses fine powder.

In addition, TVEL has developed and manufactured prototype lasers for 3D printers with the selective laser melting technology. A prototype printer with the same technology has been developed as well. As expected, the new products will enable the company to compete both in the Russian and international additive technology markets.

They make Rosatom an essential part of the nuclear fuel and isotope business and a promising player in new segments of the global power industry and material science.

Sky-High-Quality Composites

Rosatom's composite materials division UMATEX is entering the aviation procurement market. Its recent major achievement is participation in the development of Russia's latest medium-range MC-21–300 airliner. The next step is a partnership with Ural Works of Civil Aviation to manufacture aircraft components.

Presentation of MC-21–300, a narrow-body Russian-designed airliner, was central event of the international air show MAKS 2021. A distinctive feature of the aircraft is a large number of composite parts, including wings, tail, mechanical parts, etc., making up 30% of its total weight. Composite materials are lightweight, durable and non-corrosive. To compare, the specific weight of carbon fiber is only 1.5 grams per cubic centimeter, while aluminum alloy weighs 2.8 g/cu cm, and titanium alloy 4.5 g/cu cm. Due to the lightweight and durability of composite materials, the aircraft needs less fuel and is generally more cost-efficient throughout the service life.

ROSATOM NEWS

Back to contents

MC-21–300 composite wings with a high aspect ratio use a new generation of supercritical airfoils to improve aerodynamic performance of the aircraft at a cruise height. In 2018, after foreign vendors dropped out of the project, the Russian government launched an import substitution program. Wing panels of the aircraft are produced using a binder tape made of carbon fiber manufactured at Alabuga-Volokno (part of UMATEX). Center wings are also made of Rosatom carbon fiber.

Parts and components for MC-21–300, which is assembled at Irkut Corporation, are not the only example of UMATEX partnerships with aircraft makers. UMATEX and Ural Works of Civil Aviation (UWCA) signed a joint venture agreement at MAKS 2021. The joint venture will produce composite parts for small aircrafts, in which UWCA specializes. For instance, its product portfolio includes a proprietary training aircraft UTS-800 made of composite materials. The parties also discuss possible plans to make products for the nuclear industry. International markets and other applications are also under consideration.

Currently, the parties are selecting a site for the new plant, which is scheduled for commissioning in 2022. UMATEX and UWCA will also establish a competency center for composite materials, with artificial intelligence used for research and staff training.

The new production facility will enable Rosatom to supply materials, parts and components for aircraft.

Apart from the aviation industry, Rosatom composites find their way into other transportation industries, such as maritime transport. For example, UMATEX composite materials are used in the production of Grifon passenger catamarans. The Russian company also supplies its products to Italian shipbuilding companies, Azimut and San Lorenzo, which build Pacifico Adventure 99 catamarans and premium yachts.

UMATEX also makes body kits for the sport bikes of the Kawasaki Puccetti Racing Team. These parts are made of Airforce carbon fiber fabric that has a texture creating a 3D effect on the body kit. For the first time this year, a racer from Kawasaki Puccetti Racing will take part in the British Superbike Championship (BSB) on a bike with a composite body kit.

To the beginning of the section

Rooppur Construction Goes Full Tilt

The focus of this issue is on Bangladesh. Construction works, production and delivery of equipment, and staff training are all going full tilt to ensure timely commissioning and safe operation of the country's first nuclear power plant, Rooppur. Here is our review of major events, which happened in 2021.

Rooppur is the first nuclear power plant and, if viewed broadly, the first nuclear project in Bangladesh. This makes the project even more important for the economy, education, science and quality of life in the country.

Framework agreement on the nuclear power plant was signed in November 2011 followed by the general construction contract for a two-unit nuclear power plant with VVER-1200 reactors in December 2015. The agreement set out obligations and liability of the parties, deadlines, construction sequence, and other terms and conditions related to the plant construction. In November 2017, the national regulator issued a construction license for the nuclear plant. That same year, first concrete was poured for the foundation of Unit 1. Construction of Unit 2 started officially in July 2018.

ROSATOM GEOGRAPHY

Back to contents

Novovoronezh II NPP served as a reference model for Rooppur. The reference units belong to Generation III+, which meets the highest safety standards.

In August, the installation of steel structures for the internal containment dome was completed at the reactor building of Unit 1. The total weight of the structures is 230 tons. At Unit 2, tier 4 of the internal containment shell was concreted up to the level of 38.5 m in June ahead of the schedule. Currently, tier 5 is being concreted to reach the height of 44.1 m.

Equipment delivered to the site in 2021 is intended primarily for Rooppur Unit 2. All the essential machinery and equipment for Unit 1 were delivered earlier. This March, ZiO-Podolsk (part of Rosatom's power engineering division AtomEnergoMash) shipped a moisture separator reheater and a high-pressure preheater. Moisture separator reheaters are designed to dry and superheat wet steam. High-pressure preheaters heat the water fed into the steam generator. At the end of the month, ZiO-Podolsk manufactured a separation tank for the moisture separator reheater. It is designed to collect moisture from the separator.

In March 2021, PetrozavodskMash (another subsidiary of AtomEnergoMash) manufactured twelve high pressure wedge gate valves for the turbine islands of Units 1 and 2. The valves shut off water supply to ensure safe operation of a letdown system and a turbine lubricating system. In June, the company assembled the first primary coolant pump. These pumps ensure coolant circulation in the primary loop and operate under the pressure of about 160 MPa and temperature of 300 °C. Each VVER-1200 reactor has four primary coolant pumps.

Safety at the construction site during the pandemic is not just compliance with mandatory rules and requirements, but also vaccination. The Rooppur construction site received vaccines for 1,000 employees. On the very first day, 800 workers registered for vaccination. **"ASE takes a responsible attitude towards the health of its employees. This is an integral part of our safety culture. It is the first international project in which Rosatom has offered employees to get a Covid-19 vaccine,"** said Alexei Deriy, ASE Vice President and Director of the Rooppur construction project.

Another important task for Rosatom in Bangladesh is to train both construction workers and operating staff for the future nuclear power plant. In late May, the plant opened a stationary training center for construction and installation workers. Before that, professional training courses had been held in a mobile center.

In the new center, Bangladeshi workers can change their career path by getting a new profession or improving their qualification. It is properly equipped to hold practical training classes on general construction, electrical and arc welding operations, installation of

equipment, pipes, air ducts and ventilation systems. More than 7 000 people are expected to graduate from the training center within a calendar year.

In July, a group of officers from the Bangladesh Army led by Brigadier General Abdullah Al Yusuf completed a training program at the Global Nuclear Safety and Security Institute of Rosatom's Technical Academy. The two-week program was dedicated to the protection and safeguarding of nuclear facilities. The officers learned how to protect nuclear facilities and studied relevant international regulations. Along with theoretical classes, the officers were trained in using means of physical protection in a special training area and laboratories.

"The Rooppur NPP is now under construction, and we need to learn all the information ranging from design to commissioning of physical means of protection for nuclear power plants. The program offered by Rosatom Technical Academy focuses on what we will have to do in the coming year. Developing practical skills is very important. We are determined to learn as much as possible and apply our knowledge in our further activities," Abdullah Al Yusuf said.

Also in July, 15 students from Bangladesh graduated from the National Nuclear Research University (MEPhI) with a bachelor's degree. Moinul Islam Titas, Deputy Minister of Science and Technology of Bangladesh, noted that young people would fulfill the dream of the country's founding father Sheikh Mujibur Rahman, who wanted Bangladesh to become a strong and developed country.

To the beginning of the section

AtomStroyExport (ASE) is Rosatom's engineering division and a global leader constructing most of the nuclear power plants abroad and having the world's largest portfolio of nuclear construction contracts. The division is active in Europe, Middle East, North Africa, and Asia Pacific.

AtomEnergoMash (AEM) is Rosatom's power engineering division and one of Russia's largest power machinery producers providing comprehensive solutions in design, manufacture and supply of machinery and equipment for nuclear, thermal, petroleum, shipbuilding and steel-making industries. Its production facilities are located in Russia, the Czech Republic, Hungary and other countries.

Nuclear to Support Climate Neutrality

The global community keeps discussing the eligibility of nuclear energy for the energy mix. An obvious argument for the nuclear industry, which has recently resurfaced, is that peaceful atom is the only source of carbon-free energy except renewables. If we want to curb emissions and achieve climate neutrality, we need nuclear generation.

Discussions about nuclear energy are going on in the European Union, United States, and United Kingdom. Every day it becomes clearer that the stakes are growing. This is not about competition between available energy technologies but about avoiding a climate disaster. There is a growing outcry from the professional community: why are we backing away from technologies that can save our planet from extreme warming?

"If they say this [climate change] is apocalyptic or it's an unacceptable risk, and then they turn around and rule out one of the most obvious ways of avoiding it [nuclear power], they're not only inconsistent, they're insincere," says Kerry Emanuel, a climate scientist from the Massachusetts Institute of Technology (MIT, USA). Tellingly, this quote was published by German newspaper Tichys Einblick, but Germany is consistent in its efforts to phase out nuclear energy as soon as possible.

TRENDS

Back to contents

"Indeed, it is absurd that the same people who keep telling us daily about the looming climate change are always silent about nuclear energy," complains an author of the article, Rainer Zitelmann. He added that the true reason behind the nuclear phaseout was not the Fukushima disaster but the victory of the Greens (hailing from the anti-nuclear activists) in the election in Baden-Württemberg just two weeks after the disaster. The phaseout was Angela Merkel's attempt to win more votes in that situation, the author believes. It was a wrong move as Germany **"has not succeeded much in tackling climate change since then despite all the efforts it has made."** As noted by the author, the 2021 Environmental Performance Index published by Yale University says some analysts believe the nuclear phaseout will make Germany fall short of its climate protection goal.

The same view is shared by French politicians and public figures. **"What is happening in the EU now? The EU has set the goal of achieving carbon neutrality by 2050 and cut CO2 emissions by 55% by 2030 as compared to the 1990 level. It proceeds with promoting renewable energy and energy efficiency measures. All these efforts match the role the EU intends to play in fighting global warming. It is time for us to stop buying into myths, such as the one about the massive use of intermittent renewables being sustainable,"** reads an article written by Bernard Accoyer, President of the Association for the Defense of Nuclear Heritage and Climate (PNC France) and ex-President of the National Assembly of France, and Marc Deffrennes, a founder of weCARE. They think responsible politicians should ask themselves about the role nuclear energy will play in the very low carbon energy mix and do their best to extend the life of existing nuclear power plants. This will help avoid any further major investments in gas, which will otherwise persist in the long run, along with carbon fuels. **"Belgium is an example of what should never be done: it has phased out nuclear for political reasons alone, built gas-fired power plants instead, and used a financing mechanism that only (…) increases electricity costs for end consumers. Apart from maintaining the existing reactors, we should never stop developing reactors of the future, including smaller ones, for a better integration into a completely carbon-free, flexible and streamlined system,"** the authors say.

"The current climate crisis is imminent and unavoidable. At the same time, more than 8 million people die each year from air polluted by fossil fuels. Those deaths can be avoided, and nuclear energy brings clear advantages in this context. It facilitates sustainable energy transition, improves air quality, creates new jobs, and enables continuous production of cheap green electricity at the power plants that have a relatively long service life — up to 80 years — and are safe," say pro-nuclear activists Zion Lights (UK) and Isabelle Boemeke, and Myrto Tripathi, President of Les Voix du Nucléaire (a French NGO).

TRENDS

Back to contents

This July, American media website CNET published an article with multiple comments and data on the need to develop the nuclear industry to curb emissions. **"Key to all of this is the degree to which you think we can actually meet climate goals with 100% renewables. If you don't believe we can do it, and you care about the climate, you are forced to think about something like nuclear,"** Leon Clarke, Research Director at the Center for Global Sustainability, commented on the matter.

The author of the article reminds that, after the Fukushima disaster, Japan replaced its nuclear power plants with coal-fired facilities instead of renewables. In the next five years, it is going to build 22 more coal-fired power plants. New York follows the same path. **"But with three natural gas plants set up to help provide the power hitherto generated by Indian Point, emissions are likely to go up following the plant's closure. This is more than a guess: natural gas's share of energy consumption rose from 36% to 40% after Indian Point's first reactor was shut last year,"** Clarke says. The idea of replacing nuclear power plants with renewables is a mental trap because the ultimate goal should be decarbonization rather than playing with technologies. **"People say, 'Well, we are replacing nuclear with wind and solar… But I think that is looking at this backwards. We want to displace fossil fuels,"** the article quotes Dietmar Detering, a German entrepreneur living in New York, as saying.

The conclusion about the importance of nuclear for decarbonization is made in the Nuclear Technology Review that relies on the data from UNECE's Pathways Project ("Strengthening the Capacity of the UNECE Member States to Achieve the Energy-related Sustainable Development Goals — Pathways to Sustainable Energy"). **"All available low-carbon technologies will need to be deployed to fill the gap between what has been committed and what is needed,"** it says.

However, nuclear energy is still facing criticism. Even a quick online search brings up critical articles published by Forbes, Heinrich Böll Foundation (affiliated with the German Green Party), The New York Times, etc. In fact, the criticism comes down to four points: nuclear is expensive, takes too much time to build, dangerous, and customers become dependent on a technology vendor.

There are valid objections to each of the points, though. Let us look at the costs first. The Nuclear Technology Review prepared by the UNECE Task Force on Carbon Neutrality and a group of top international experts contains an important note saying that the levelized cost of energy (LCOE) from different sources should be compared country by country rather than viewed in general. Thus, LCOE for a nuclear plant in Japan, Russia and South Korea turns out to be the lowest as compared to any other renewables. The same holds true for nuclear generation in France and the USA. **"In many parts of the world nuclear power is one**

of the most cost-competitive options for generating electricity. Just like other generating technologies the cost of nuclear electricity is sensitive to a range of factors including assumed asset lifetime, capacity factors, capital costs, fuel costs and operating costs," the authors of the review point out.

They also believe that costs can be reduced further by improving design maturity and operation efficiency, ensuring reliable and predictable control, and launching mass production. This will bring the cost of building a post-FOAK station down by 40%, and serial reactors down by 60%. The reduction can be achieved through design optimization, technology innovation, revision of regulatory procedures, and harmonization of licensing, codes and standards.

As for the time needed to construct a nuclear plant, it is true that it cannot be built in a year, but it is quite possible in five to seven years. For example, first concrete for the foundation of the Belarusian NPP was poured in November 2013 and it was connected to the national power grid in November 2020. Many say it is much longer than building a wind or solar farm. True but we should keep in mind that the design lifetime of older nuclear reactors was 40 years, while today it is extended to as long as 80 years. The design lifetime of Rosatom's nuclear stations is 60 years and may be extended to 80 and, possibly, even 100 years. In other words, a single nuclear power plant operates as long as three to five successive wind or solar farms do.

Nuclear waste is another concern, but countries like France and China are working on resolving the issue. However, Russia is the most active player in the 'closed nuclear fuel cycle' field. Today, this concept finds its way into practice in different ways: sodium-cooled fast reactors (e. g., BN-800 at the Beloyarsk NPP), lead-cooled fast reactors (e. g., pilot BREST-300 reactor), and REMIX fuel for VVER reactors. Closing the nuclear fuel cycle will enable full utilization of uranium energy capacity, as well as reduction in waste and storage time. The Nuclear Technology Review says about 97% of radioactive waste generated by the nuclear industry belongs to very low-level or low-level waste in terms of its radiochemical properties. High level radioactive waste accounts for as little as 0.1% of the total amount. In order to dispose high-level waste, Finland is building a deep geological repository structured with multiple safety barriers. Finally, even high-level radioactive waste has a natural ability of becoming safer over time.

Speaking about safety, let us not deny the obvious: the history of the nuclear industry (since the opening of the first nuclear power plant in 1954 in Obninsk, USSR) remembers only three large-scale nuclear accidents. Each accident led to a massive reevaluation of safety requirements. As you may know, no one died from radiation poisoning at Fukushima. The root cause analysis prompted numerous improvements in the design and

Back to contents

operation of nuclear power plants. **"Nuclear facilities are engineered with multiple protective barriers to protect people and the environment from the release of radioactive material. The regulatory justification for a proposed UK nuclear power plant estimates that the radiation dose to any member of the UK public per year to be around the same as from a return flight from the UK to New York. The nuclear energy industry is responsible for less than 0.1% of the radiation that most people are exposed to in their daily lives,"** says the Nuclear Technology Review.

Some estimates suggest that nuclear is almost as safe as renewable energy sources, especially when compared with coal, oil or even natural gas.

Dependence on a technology vendor (primarily in terms of politics) is also exaggerated, as shown by the New Nuclear Watch Institute (NNWI) in a report called "Energy Security in the Age of Net-Zero Ambitions and the System Value of Nuclear Power." It can be either reduced or is disadvantageous for the vendor itself. If the vendor quits the project before the construction begins, the customer will lose money spent on administrative expenses (e. g., negotiations). But the same expenses will be written off as a loss by the vendor, too. Thus, the risk of quitting the project is highly improbable, with the Bushehr project being the only exception. As you may know, the construction of the Bushehr NPP was launched by a Siemens division in 1975 and suspended 5 years later for political reasons. Another 12 years later, in 1992, Russia stepped in, and in September 2011, Bushehr Unit 1 was connected to the national power grid. Bushehr proves that a nuclear construction project can be completed by another vendor. Finally, the risk of nuclear fuel supply interruptions can be mitigated by building up reserves. Apart from that, competition is now so intense that a failure to meet contractual obligations is out of the question.

To recap, nuclear generation is carbon-free, reliable and independent from the weather or fuel prices, and prevents emissions of greenhouse gases, ash and dust. With a favorable political environment and public perception, nuclear is able to make a sizable contribution to the planet's clean future.

To the beginning of the section

Safety at Core

El Dabaa NPP will follow the highest safety standards, President Abdel Fattah al-Sisi guarantees. Egypt's top-rank officials praise the substantial progress on the construction project, which is now at its preparatory stage.

President of Egypt Abdel Fattah al-Sisi has given instructions to follow the strictest international safety standards at El Dabaa Nuclear Power Plant. The president stressed the need to coordinate activities between all the government bodies involved in the project, including the Nuclear Power Plant Authority (NPPA), Egyptian Nuclear and Radiological Regulatory Authority (ENRRA), and General Authority for Urban Planning (GAUP). It is also planned to conduct a large study in association with the Central Agency for Public Mobilization and Statistics (CAPMAS) to forecast the population growth around the future power plant.

Egypt's top-rank officials keep a close eye on this national priority project. In July, Minister of Electricity and Renewable Energy Mohamed Shaker said the nuclear construction project had gained a positive momentum. The Egyptian nuclear program is fully supported by the country's political leadership, while the Egypt-Russia professional team is ready to resolve any challenges they face, he stressed.

According to Ihab Nasr, Egyptian ambassador to Russia, the construction of El Dabaa moves forward as scheduled and the Russian and Egyptian parties are satisfied with the progress of the project. El Dabaa is **"the**

largest ever project in the history of the Russian-Egyptian relations under control of President of Russia Vladimir Putin and President of Egypt Abdel Fattah al-Sisi," El Balad daily quotes the ambassador as saying.

In the framework of contracts pertaining to the construction of Egypt's first nuclear power plant Rosatom conducts training of Egyptian specialists. In early September, the first groups of specialists from El-Dabaa began training at the St. Petersburg branch of Rosatom's Technical Academy.

The training programme for the personnel of the nuclear power plant currently under construction in Egypt will be inaugurated with a six-month Russian language course, which will have an enrollment of 465 Egyptian students. After that, the Egyptian specialists will start their theoretical training course on the basis of a reference Rosatom nuclear power plant and will undergo practical training and internships at Leningrad NPP-2 and at other workplaces. Rosatom will train about 1,700 specialists in the framework of this programme by 2028. The programme will take place at both Rosatom Technical Academy in Russia and the Nuclear Power Plant Training Centre in Egypt.

Grigory Sosnin, Vice President, Director of the El-Dabaa NPP Construction Project of ASE, noted the importance of training the personnel of the nuclear power plant currently under construction in a timely manner. **"This is a long-awaited event for us. The great Russian commander, Alexander Suvorov, said that learning is light and ignorance is darkness. Russia will become a second home for Egyptian trainees and nuclear knowledge will bring light to your homes,"** he said.

According to the rector of Rosatom Technical Academy Yuri Seleznev, the St. Petersburg branch has made efforts to further equip its training facilities and modernise its IT infrastructure to improve the quality of training of personnel. Instructors, amongst them both experienced operators who have worked at nuclear power plants for many years and young specialists who have completed long technical training courses, have had internships at nuclear power plants, and are fluent in English, have been prepared to conduct trainings. An analytical simulator is also expected to be commissioned at the training site by the end of the year. Students' living conditions were also improved, taking into account the cultural characteristics of the Arab country, in the framework of an investment project for the development of Rosatom Technical Academy.

Over the last seven years, Egypt implemented more energy projects than over the previous 70 years, Hani Dahi, Head of the Syndicate of Engineers, said at a seminar held in August. As recently as 2014, he pointed out, energy production in the country met only 75% of Egypt's needs. Today, the country has a surplus of electricity because its installed

capacity has grown from about 30,000 MW to more than 75,000 MW since then.

The Syndicate of Engineers' members appreciated the efforts taken by the NPPA. **"We are sure that the national nuclear program is in good hands of experienced and trustworthy Egyptian professionals. We wish them success and remain confident that the program will be carried out in full and the best way possible,"** they say.

NPPA Chairman Amged El-Wakeel spoke about three main stages of El Dabaa project. The first stage comprises site preparations for the plant construction. The second stage starts when a construction license is obtained and includes all the activities related to construction, staff training and preparations for cold and hot tests. The third stage begins with obtaining a pre-operational test permit and comprises functional tests and achieving first criticality. This stage lasts till the first reactor unit is accepted and an operating license issued.

Hassan Abdel Alim, General Secretary of the Syndicate, noted that construction of the first nuclear power plant in the country was an ambitious and promising project for both Egypt and the entire African continent. He added the project would give an impetus to economic development of the country and help achieve the goals of the National Sustainable Development Plan for a period until 2030.

El Dabaa Nuclear Power Plant will have four units with VVER-1200 reactors. Many countries choose VVER-1200 technology for its advanced safety features recognized by the IAEA. This technology is already in use at four power units in Russia — at Leningrad and Novovoronezh NPPs — and at one power unit in Belarus. Moreover, VVER reactors will be installed at several power plants currently under construction in Hungary, Finland, Turkey, Bangladesh.

In order to introduce key operating principles of VVER reactors and nuclear plants to the general public, Rosatom organized a virtual press tour to the Leningrad NPP for leading Egyptian media.

During the virtual tour, its participants were explained how Leningrad II and its two units with Generation III+ VVER-1200 reactors operate and what contribution the plant makes to the economic, social and infrastructural development of the region. Journalists were shown 360-degree photos of the turbine island, main control room, personnel training center and even the reactor island, access to which is usually restricted.

"Today, we offer a once-in-a-lifetime opportunity to visit a nuclear power plant and talk to Russian nuclear experts online, literally from the screen of your personal device. This year, we will organize five virtual tours to Russian nuclear facilities, including the floating power plant," said Nikita Konstantinov, Deputy CEO and Director for Business Development at RosEnergoAtom.

The tour ended with a Q&A session, during which journalists got detailed answers and comments about the Leningrad NPP and VVER-1200 technology.

To the beginning of the section

Building Knowledge and Skills

Education and training make an integral component of the national nuclear infrastructure. Turkish students receive degrees from leading Russian universities, while Russian experts share their experience in teaching 'nuclear' subjects with Turkish colleagues.

In late August, Turkish graduates from Peter the Great Saint Petersburg Polytechnic University (SPbPU, Russia), who completed their education under the training program for the Akkuyu NPP operating personnel, received their master's degrees. All 22 graduates successfully completed the program with 12 people receiving cum laude degrees. During two years of education, the students had been trained in Thermal Engineering and Electrical Engineering. Nuclear-related subjects were taught in English, while would-be AKKUYU NUCLEAR employees were also offered additional Russian language classes.

In September 2021, AKKUYU NUCLEAR will employ Turkish graduates from SPbPU's master degree program.

"Construction of the country's first nuclear power plant is a huge step forward for Turkey, so me, my family and my friends are very proud of the fact that I am going to become a part of this project. I am also very glad that the Akkuyu NPP is being built

TURKEY

Back to contents

in Mersin, a province where I was born and raised. I am sure that, thanks to this project, Turkey and Mersin will get a great boost for their development," says SPbPU graduate Tugce Kurt.

SPbPU was founded in 1899 and is considered to be one of the best technical universities in Russia.

This academic year, another 25 bachelor students from Turkish universities joined the targeted training program. Before leaving for Russia, they were invited for a meeting at Turkey's Ministry of Energy and Natural Resources.

"The main goal of the Ministry and other competent government agencies is to hand the nuclear power plant over to you, would-be plant operators, who will ensure its safe and reliable functioning. This is the reason why studying in Russia is extremely important for the entire project — you will acquire necessary knowledge and skills and be assimilated into the nuclear safety culture," Salih Sari, Head of Nuclear Infrastructure Development Department at the General Directorate of Nuclear Energy and International Projects of the Turkish Ministry of Energy and Natural Resources, said addressing the students.

The education program was initiated by AKKUYU NUCLEAR in 2011. The costs of training are covered by Russia. The students are trained at the National Nuclear Research University (MEPhI) and Peter the Great Saint Petersburg State Polytechnic University (SPbPU). In total, 186 young Turkish professionals have completed the training program, and all of them have been employed by AKKUYU NUCLEAR. Now they are working at the first nuclear power plant construction project in Turkey. Another 85 Turkish students continue their studies under the program.

It is not only Turkish students who will acquire new knowledge. In August, AKKUYU NUCLEAR employees who had graduated from the training program for the Akkuyu NPP operating personnel, conducted a training session for vocational high school teachers from the Mersin province. The Introduction to Nuclear Energy course will be included in the curriculum of seven vocational high schools in Mersin for the 2021/2022 academic year. During the one-week session, the teachers attended lectures and seminars organized at the training center of the under-construction Akkuyu NPP.

With support from the Ministry of National Education and lecturers from the relevant departments of the Turkish universities, AKKUYU NUCLEAR also developed a textbook for the Introduction to Nuclear Energy course. Starting from the 2021/2022 academic year, it is included in the curriculum of seven vocational high schools in Mersin. Students will have all necessary learning materials. In addition, it is planned to conduct technical tours to the Akkuyu NPP construction site, additional classes at the

TURKEY

Back to contents

AtomEnergoMash (AEM) is Rosatom's power engineering division and one of Russia's largest power machinery producers providing comprehensive solutions in design, manufacture and supply of machinery and equipment for nuclear, thermal, petroleum, shipbuilding and steel-making industries. Its production facilities are located in Russia, the Czech Republic, Hungary and other countries.

nuclear plant training center, and tours to the Akkuyu Public Information Center in Mersin.

"The training was very effective and incredibly useful for us, teachers, because we will have to tell our students about atomic energy," says Latif Uzun, a teacher of Physics from Ataturk Anatolian Vocational High School in Toroslar district, Mersin.

The Akkuyu project offers equal career opportunities to all professionals. Today, about one thousand women work for the project, and many of them hold senior positions. For example, Burul Bugubaeva is a senior expert at the HR Department. **"Akkuyu is a project offering women vast employment opportunities and a source of stable income. Since AKKUYU NUCLEAR is a transnational company, we have a chance of gaining an unrivaled experience,"** Burul Bugubaeva says.

Naila Atmaca, who is a lawyer at AKKUYU NUCLEAR, thinks that the project is very important in terms of employment opportunities for both women and men. **"AKKUYU NUCLEAR is not just about electricity and lighting in our homes — it is a project that will shed light on our youth, our future and our society in general,"** she says.

Meanwhile, work is going full steam ahead at the nuclear plant construction site. Preparations have started for the construction of the fourth unit. Pit excavations for the key buildings are underway on an area covering 655 square meters. The maximum depth of the pit will be nearly 12.5 meters. All in all, workers will have to remove almost 600,000 cubic meters of soil.

"We expect to obtain a construction license for the fourth power unit later this year and begin full-scale construction works at the beginning of the following year. We will start making a concrete bed for the foundation slabs of the nuclear and turbine islands and then proceed with foundation reinforcement by the end of the next year. The Akkuyu NPP will thus become the world's largest nuclear site with four power units simultaneously under construction," says Sergey Butskikh, First Deputy CEO at AKKUYU NUCLEAR and director of the under-construction nuclear power plant.

In the meantime, Atommash, a major Russian nuclear company and part of Rosatom's power engineering division, began shipping steam generators for Akkuyu's second power unit. Four 355-ton steam generators — important components of the reactor's primary loop — will travel 3,000 kilometers by water.

"The first out of four steam generators was manufactured eight months ahead of the production schedule. The time of key production operations was reduced almost twice," says Igor Kotov, CEO of AEM Technologies. NL

To the beginning of the section

VVER-1200: Infographics

The Rooppur NPP will feature two Russian-designed VVER-1200 reactors with a total power capacity of 2,400 MW. These reactors belong to Generation III+, which meets the highest safety standards.

VVER-1200 is the most modern and safest pressurized water reactor

Combines the most successful solutions and technologies of previously developed installations. In comparison with its predecessor, the VVER-1000, it features a higher capacity, twice as long of a service life, a higher steady state availability factor (SSAF), and a high resistance to external threats.

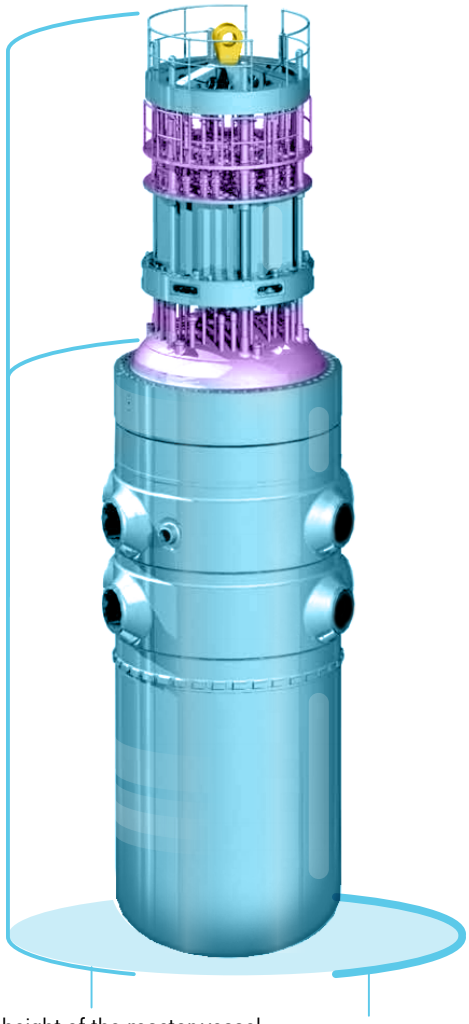

3200 MW – thermal power

35,9 % – Efficiency coefficient

Maximum burnup is up to 70 MW day/kg

Water serves as a moderator and a coolant

1,5 year – inter-reloading period

4- and 5-year cycles are also feasible

In a 18-month fuel cycle 28 800 MW of energy is produced per day per power unit

163 pcs – fuel rods per assembly

A 60 years – lifecycle

The height of the reactor vessel – 11 185 mm (including its upper unit - 19,410 mm)

The total reactor vessel mass – 323 tonnes

1200 MW – electrical output

92% – Steady state availability factor (SSAF)

Nuclear in South Africa: History and Prospects

South Africa was one of the first countries on the continent to become involved with nuclear technologies. Professor James Larkin, Director of the Radiation and Health Physics Unit at WITS University (South Africa) talks about nuclear industry development, the most popular radiation technologies and the main arguments in favor of nuclear.

Professor Larkin, could you please tell us the short history of the nuclear industry in South Africa?

It's quite hard to be brief, as South Africa has been heavily involved in the whole nuclear cycle since the 1940's when uranium was mined at the Blyvooruitzicht Gold mine, for the UK's atomic programme. South Africa was in fact one of the founding members of the International Atomic Energy Agency, because it was one of the first countries to mine uranium. Since that time, there has been an active nuclear research programme in the country. In 1965, under the Atoms for Peace programme, South Africa received a TRIGA reactor from the USA. It was dubbed SAFARI-1 (South African Fundamental Atomic Research Installation). This reactor after various modifications over the years continues to be used for research and the production of various industrial and medical isotopes. In the 1970's South Africa started a programme of uranium enrichment for various purposes both civil and military

which continued into the early 1990s. In the 1980's Koeberg Nuclear Power Station was built and synchronized to the national electrical grid (Unit 1 in 1984, and Unit 2 in 1985). All whilst nuclear technologies were developed and installed for the medical field. Indeed, Allan MacLeod Cormack, a South African received the Nobel Prize in Physiology or Medicine in 1979 for his work on inventing and developing the CT scanner, an essential imaging tool in the medical field nowadays. In 1991, South Africa announced to the world that it had built and eventually dismantled six atomic weapons and signed the Nuclear Non-proliferation Treaty on July 10th, 1991. During the 1990's South Africa took a lead in the design of the Pebble Bed Modular Reactor, a high temperature gas cooled reactor. Unfortunately, for various reasons the project was halted in 2010. Coming right up to date, the government has decided to include the nuclear option for power generation in its plans.

How and in what areas is radiation technology used in South Africa today? Which technologies do you see as the most promising and in-demand in the future?

Nuclear technology and science are used in a multitude of areas here in South Africa. From non-destructive testing of welds in high tech industries, to medical diagnostics and treatment, to power generation, insect control, to quite possibly rhinoceros horn devaluation and poaching reduction

You are the director of the Radiation and Health Physics Units at the Wits University. What tasks are set by the researchers of this unit and what key projects/research in the field of radiation technology can you highlight? What interesting projects have you personally been involved in?

As a support unit that gives support to other research groups, we do not do much research in house. I am required to sign off on all research in the university that makes use of radiation and/or radioactive materials. I can, however, highlight the Rhisotope Project that is looking to devalue rhinoceros horns and thereby reduce the numbers of these animals poached. This is a 'home — grown' project that although it is run out of the RHPU, involves people from other faculties within the university, and other international partners.

In general, is the radiation physics field popular among applicants?

Unfortunately, it is not seen as a popular field amongst students, it is perceived to be a hard subject to learn. Students are generally only introduced to the subject of nuclear science once they arrive at university, rather than at school.

Can we say that the development of radiation technology is a driver for the development of science and education in the country as a whole?

If anything, I would say that it would need to be the other way around. We need to get

the basics of science and mathematics sorted out before we can get students to understand nuclear technologies.

In many countries, including South Africa, there are both pro- and anti-nuclear people. Please name three arguments in favour of the peaceful atom.

Firstly, medical science has made much use of various nuclear technologies for the diagnosis and treatment of numerous medical conditions, and there is more that can be done in this field. For example, the further development of proton therapy or application of radioisotopes in the treatment of particular conditions. Secondly, the need for the development, installation, operation, and licensing of stable power supply systems based either on fission or fusion. Finally, fundamental nuclear physics is still teaching us about what things are made of, who knows where this will lead? NL

To the beginning of the section